EQUUS®

PURINIZER

IONIZER

PURIFIER

FAUCETS

FOOD WASTE DISPOSER

OUR **GLOBAL** ASSOCIATES

EMERSON
Commercial & Residential Solutions
USA

PUREPRO
DRINKING WATER SYSTEM
USA

TYENT
WATER FOR WELLNESS
USA

ALKAMEDI
Korea

CUCKOO
Korea

Equus Enterprises LLP.
Ahmedabad was incorporated under Companies Act of India.

Mission
To be Ahead of Times.
In the era of globalisation, cater the world's best and latest products and technologies
to upgrade Quality of Life of Indian consumers.

25-October-2016
EQUUS

January 2017
EMERSON
insinkerator

Fresh launching, in India, of **Insinkerator** - the world's largest selling Food Waste Disposer brand manufactured by **Emerson**, USA.
Much ahead of Government of India's announcement of Swachh Bharat Mission.

September 2018

Set a new trend in India, by introduce 8-stage Alkaline, Antioxidant, and Ionised water purifiers, Sourced from **PurePro** Water Corporation, USA.

PUREPRO DRINKING WATER SYSTEM

January 2019

Introduced Purinizer- a unique combination of water Ionizer and purifier, Yet, another first in India. **Purinizer** - our premium product provides the ultimate quality of drinking water essential for your health.

purInizer® Water Purifier + Ionizer

January 2020

For you to have the best global drinking water, introduced a range of Purinizer-4 models, Ionizers-6 models and only Alkaline Antioxidant water Purifiers-8 models. All sourced from 4 global best companies to give the widest choice in terms of elegance, quality, and prices.

PUREPRO DRINKING WATER SYSTEM
CUCKOO
TYENT WATER IONIZER
ALKAMEDI

January 2021

Looking forward to continue serving the best and latest products to upgrade your quality of life to the world best standards.

EQUUS

purIonizer®
Water Purifier + Ionizer

BENEFITS OF ALKALINE WATER

Fight free radicals that accelerate aging

Eliminates the need for many cleaning supplies by sanitizing surface with its germ-fighting properties

Helps flush out toxins to promote a clear and healthy complexion

Help reduce plastic bottle waste because it is eco-friendly

Has sanitizing properties that can be used in typical skin application

Help skin stay soft and hydrated

Promote better, restful sleep

Help heal minor skin irritation

Help promote strong bones

Increase energy

Help boost immune system

Helps neutralize lactic acid,which promotes faster recovery time after exercising.

Helps neutralize and release acidic waste,which encourages fat loss.

Cleans product effectively by breaking down and washing away oil-based pesticides and insecticides

pH Chart

Acid			Neutral	Alkaline		
4.0	5.0	6.0	7.0	8.0	9.0	10.0

How to measure: Place 2-3 teaspoons (10-15 ml of test waster in a container and add 2-3 drops of reagent. Then, mix well and check color of the water with the pH chart above. (Color is dependent on water qualtiy and reagent)

AWARDS

MY FM 94.3 August 2020

Specialist in providing exclusive
kitchen sink space products

RADIOCITY 91.1 FM September 2020

Excellence in alkaline antioxidant
ionized water for year 2020

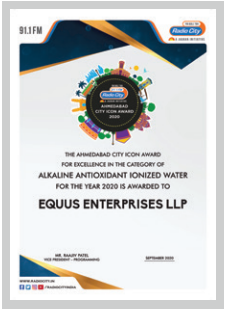

EXHIBITIONS

IGBC - Green Building Congress, Jaipur

October 2018

HBLF Show, Ahmedabad

December 2018

CONCERNED WITH YOUR **HEALTH**

Quality of drinking water has a major impact on your health.

Researches world over have proved that Alkaline water only protects you from modern day medical problems like- acidity, obesity, hypertension, skin diseases and so on. Whereas acidic water is the root cause of these diseases and even helps growth of cancerous cells.

In 2018, Equus realised that the most of the drinking water purifiers sold in India were taking care of only sediment removal, TDS control and bacteria control. Basically, the filtration technology employed was based on Reverse Osmosis (RO) process. Now, it is well known that RO process which incorporates 4/5 filters, not only produces harmful acidic water but also removes beneficial salts present in the water- Calcium, Sodium, Potassium, and Magnesium. Due to these reasons, unknowingly, people have been consuming unhealthy, tasteless, and harmful water in the name of 'Mineral Water'.

In 2018, Equus realised this problem. It scoured the world and brought in 8-stage water purifiers from the very country where alkaline water concept emerged. For the first time, Equus introduced purifiers producing alkaline; antioxidant and ionised water using 8-stage filtration technology. This is how EQUUS defines the ultimate quality of drinking water

Healthiest water, as per experts, should be - Hydrogen rich; minerals rich with natural salts Sodium, Calcium, Potassium, and Magnesium; alkaline having pH above 7.0; antioxidant having ORP ranging from -300 to -1200, and of course tasty.

Hydrogen Rich +

Alkaline Water

EQUUS®

purInizer®
Water Purifier + Ionizer

Water Purifiers Ka
DON

PURINIZER (Water Purifier + Ionizer)

A Combination Of Drinking Water Ionizers And Purifiers- 4-makes, Number Of Plates- Ranging from 3 To 11, PH Ranging From 2.5 To 11.0, ORP Ranging From -300 To -1200 mV

IONIZER (Stand-alone)

Standalone Ionizers- Make-4, Plates Numbers From Ranging 3 To 11, PH Ranging From 2.5 To 11.0, ORP Ranging From -300 To -800 mV

PURIFIERS

Purifiers- Only Alkaline, Choice Of 4 Makes, Models Alkalinity Ranging From 7.0 To 8.0 PH (Mild Alkaline)

EQUUS®

purInizer®
Water Purifier + Ionizer

Water Purifiers Ka DON

EQUUS is having a range of Ionizers like purepro-4 model, Tyent-6 model, Alkamedi - 3 model combined with suitable water Purifier-Alkaline with tank. These Ionizers are having pH range of 2.5 to 11.5 and ORP range of +300 to -1200mV.

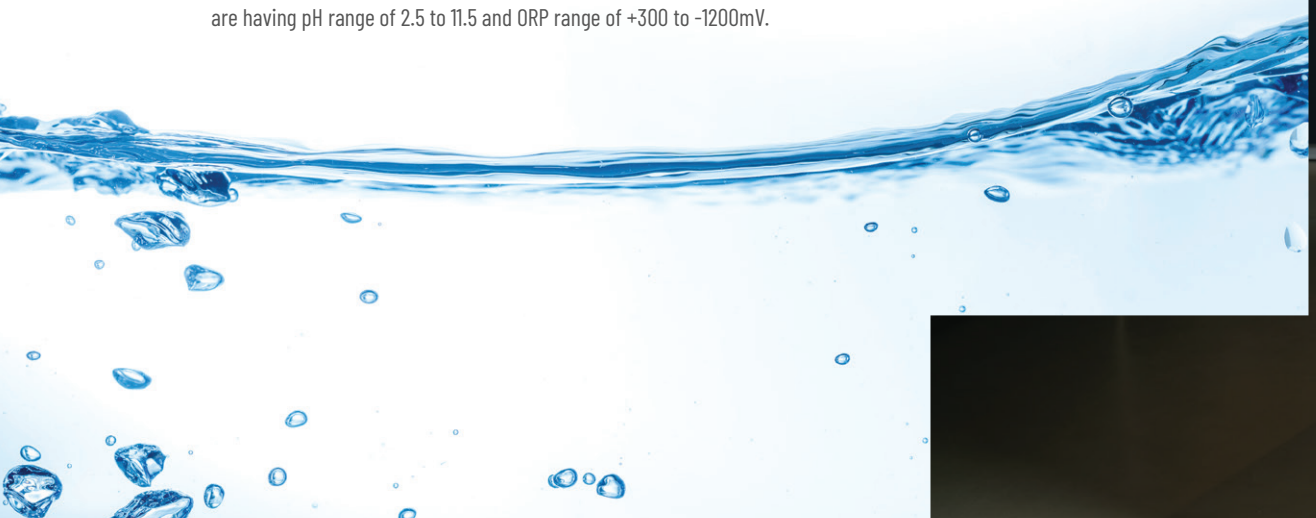

EQUUS
MICRO

EQUUS

EQUUS
ALKAMEDI

EQUUS

PUREPRO DRINKING WATER SYSTEM

MODEL NO.	EQSP-PNZ-3P	EQSP-PNZ-5P	EQSP-PNZ-7P	EQSP-PNZ-JA-2000
WATER QUALITY				
pH Range	3.9pH – 10.0 pH	3.9pH – 10.0 pH	-2.5pH – 11.0 pH	3.9pH – 10.0 pH
ORP Range	+300mV ~ -400mV	+300mV ~ -500mV	+300mV ~ -900mV	+300mV ~ -500mV
Electrode Plates	3	5	7	5
Levels	Alkaline Water - 4 , Acid Water - 2 , Neutral - 1	Alkaline Water - 4 , Acid Water - 2 , Neutral - 1	4 alkaline water 1 super-oxide 2 acid water 1 neutral	4 alkaline water 2 acid water
Unique feature	Unique post-operation automatic and silent cleansing for extended lifespan			
SPECIAL FEATURES				
Display	pH display indicator, Voice confirmation	Upright Electronic LED panel	Upright Electronic LED panel	Electronic LED panel faucet
Dispensing type	Spout 360⁰ rotation	Spout 360⁰ rotation	Spout 360⁰ rotation	Stainless steel output spout 180⁰ rotation
Operation	Optional ability to connect direct to plumbing and operate under mains pressure			
Filter / Filter Life	2 Filter silver coated activated carbon / 12000L	2 Filter silver coated activated carbon / 12000L	12000L	12000L
MECHANICAL / ELECTRICAL SPECIFICATIONS				
Product size- cm	31.5 (L) x 27.5 (W) x 14 (H)	31.5 (L) x 27.5 (W) x 14 (H)	31.5 (L) x 27.5 (W) x 14 (H)	31.5 (L) x 27.5 (W) x 14 (H)
Weight / Water Pressure	3.5 kg + 12 kg System 1~6.5kg/cm2	4.7 kg + 12 kg System 1~6.5kg/cm2	5.5 kg + 12 kg System 1~6.5kg/cm2	4.7 kg + 12 kg System 1~6.5kg/cm2
Input Voltage AC / Water Temp.	220V/50HZ / <40°C	220V/50HZ / <40°C	220V/50HZ / <40°C	220V/50HZ / <40°C
Warranty	1 Year	1 Year	1 Year	1 Year

COMMON TERMS FOR ALL PURINIZER (IONIZER + WATER PURIFIER) RANGE

*water purifier included in this price *water storage tank can be replaced as per requirement 15L/25L/35L charges will be extra

*annual maintenance program (AMC) available

purinizer®
Water Purifier + Ionizer

PUREPRO
DRINKING WATER SYSTEM

USA
© PUREPRO USA CORP., U.S.A.

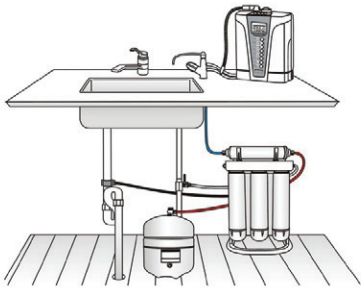

EQSP-PNZ-3P

₹99,990

EQSP-PNZ-5P

₹1,69,990

EQSP-PNZ-7P

₹2,25,000

EQSP-PNZ-JA-2000

Under Counter

₹2,35,000

USA
© PUREPRO USA CORP., U.S.A.

MEMBER
MEMBER
Water Quality ASSOCIATION

EQUUS®

TYENT USA

MODEL NO.	EQST-PNZ-5P	EQST-PNZ-7P	EQST-PNZ-9P EQST-PNZ-11P	EQST- PNZ-UCE-9P EQST-PNZ-UCE-11P
WATER QUALITY				
pH Range	2.5 PH – 11.5 PH	2.5 PH – 11.5 PH	2.5 PH – 11.5 PH	2.5 PH – 11.5 PH
ORP Range	-300 to -600	-300 to -800	-300 to -1200	-300 to -1200
Electrode Plates	5	7	9 / 11	9 / 11
Levels	Alkaline - 3, Neutral - 1, Acidic - 2, Turbo	Alkaline - 3, Neutral - 1, Acidic - 2, Turbo	Alkaline - 3, Neutral - 1, Acidic - 2, Turbo	Alkaline - 3, Neutral - 1, Acidic - 2, Turbo
Unique Feature	Chemical free patented Turbo technology for 11.5 to 2.5 pH			
SPECIAL FEATURES (CHEMICAL FREE)				
Display	Touch screen - custom LCD	Touch screen - custom LCD	Touch screen - custom LCD	Touch screen TFT-LCD
Dispensing Type Operation	Spout 360⁰ rotation	Spout 360⁰ rotation	Spout 360⁰ rotation / Jog Dial	Jog Dial & Touch with 2 way Operation Compatibility
Filter / Filter Life	2 Filter silver coated activated carbon / 7000L	2 Filter silver coated activated carbon / 7000L	2 Filter silver coated activated carbon / 7000L	2 Filter silver coated activated carbon / 7000L
MECHANICAL / ELECTRICAL SPECIFICATIONS				
Product size- mm	300(W) x 135(D) x 355(H)	300(W) x 135(D) x 355(H)	300(W) x 135(D) x 355(H)	Ionizer: 360(w) x 132(d) x 355(h) Faucet: 50(w) x 343(d)
Weight- Kgs / Water Pressure	5.2 kg + 12kg System 1~5kgf/cm²	5.2 kg + 12kg System 1~5kgf/cm²	5.2 kg + 12kg System 1~5kgf/cm²	Ionizer: 6.1 + 12 kg, Faucet: 415g 1~5kgf/cm²
Input Voltage AC Water Temp.	220-240V/50-60 Hz 4~35°C	220-240V/50-60 Hz 4~35°C	220-240V/50-60 Hz 4~35°C	220-240V/50-60 Hz 4~35°C
Warranty	1 Year	1 Year	1 Year	1 Year

COMMON TERMS FOR ALL PURINIZER (IONIZER + WATER PURIFIER) RANGE
*water purifier included in this price * 25 L Water storage tank included in this offer.
*annual maintenance program (AMC) available

purinizer®
Water Purifier + Ionizer

TYENT
USA

EQST- PNZ-UCE-9P — ₹3,12,000

EQST-PNZ-UCE-11P — ₹3,30,000

EQST-PNZ-5P — ₹1,86,000

EQST-PNZ-7P — ₹2,18,000

EQST-PNZ-9P — ₹2,50,000

EQST-PNZ-11P — ₹2,81,000

EQUUS®

ALKAMEDI

MODEL NO.	EQSA-PNZ-5P-2000	EQSA-PNZ-7P-4100
WATER QUALITY		
pH Range	Min- 3.5 to Max- 10.5	Min- 3 to Max- 11
ORP Range	+500mV to 500mV	+600mV to 600mV
Electrode Plates	5	7
Levels	Alkaline - 4 , Purified - 1 , Acidic - 2	Alkaline - 4 , Purified - 1 , Acidic - 2
SPECIAL FEATURES (CHEMICAL FREE)		
Display	7 LCD colour display	7 LCD colour display
Dispensing type	Flexible Spout	Flexible Spout
Operation	Knob & Touch button	Knob & Touch button
E Plate Cleaning	DARC System Patented Automatic	DARC System Patented Automatic
Filter / Filter Life	Carbon Black & UF Carbon / About 3600 L / 6-10 months	
MECHANICAL / ELECTRICAL SPECIFICATIONS		
Product size- mm	240 (W) x 150 (D) x345 (H)	257 (W) x159 (D) x375 (H)
Weight- Kgs	5.4 + 12 kg System	6.1 + 12 kg System
Input Voltage AC	220-240V/50-60 Hz	
Warranty	1 Year	1 Year

COMMON TERMS FOR ALL PURINIZER (IONIZER + WATER PURIFIER) RANGE

*water purifier included in this price *water storage tank can be replaced as per requirement 15L/25L/35L chargers will be extra

*annual maintenance program (AMC) available

purinizer®
Water Purifier + Ionizer

ALKAMEDI KOREA

EQSA-PNZ-5P-2000 ₹1,75,990

EQSA-PNZ-7P-4100 ₹2,29,990

KFDA RoHS UL LISTED CE ISO GMP

EQUUS®

TYENT USA

MODEL NO.	EQST-INZ-5P	EQST-INZ-7P	EQST-INZ-9P EQST-INZ-11P	EQST-INZ-UCE-9P EQST-INZ-UCE-11P
WATER QUALITY				
pH Range	2.5 pH – 11.5 pH	2.5 pH – 11.5 pH	2.5 pH – 11.5 pH	2.5 pH – 11.5 pH
ORP Range	-300 to -600	-300 to -800	-300 to -1200	-300 to -1200
Electrode Plates	5	7	9 / 11	9 / 11
Levels	Alkaline - 3, Neutral - 1, Acidic - 2, Turbo	Alkaline - 3, Neutral - 1, Acidic - 2, Turbo	Alkaline - 3, Neutral - 1, Acidic - 2, Turbo	Alkaline - 3, Neutral - 1, Acidic - 2, Turbo
Unique feature	Chemical free patented turbo technology for 11.5 to 2.5 pH			
SPECIAL FEATURES (CHEMICAL FREE)				
Display	Touch screen - custom LCD	Touch screen - custom LCD	Touch screen - custom LCD	Touch screen TFT-LCD
Dispensing type	Discharge nozzle with directional control	Discharge nozzle with directional control	Discharge nozzle with directional control	Discharge nozzle with directional control
Operation	Rotation and click action - Jog Dial	Rotation and click action - Jog Dial	Rotation and click action - Jog Dial	Jog Dial & Touch with 2 way Operation Compatibility
Filter / Filter Life	2 Filter / 6 Months or 7000 L (Depending on source of water quality)	2 Filter / 6 Months or 7000 L (Depending on source of water quality)	2 Filter / 6 Months or 7000 L (Depending on source of water quality)	2 Filter / 6 Months or 7000 L (Depending on source of water quality)
MECHANICAL / ELECTRICAL SPECIFICATIONS				
Product size- mm	300(W) x 135(D) x 355(H)	300(W) x 135(D) x 355(H)	300(W) x 135(D) x 355(H)	Ionizer: 360(w) x 132(D) x 355(H) Faucet: 50(W) x 343(D)
Weight- Kgs / Water Pressure	5.2 kg 1~5kgf/㎠	5.2 kg 1~5kgf/㎠	5.2 kg 1~5kgf/㎠	Ionizer: 6.1kg, Faucet: 415g 1~5kgf/㎠
Input Voltage AC Water Temp.	220V/50Hz 4~35˚C	220V/50Hz 4~35˚C	220V/50Hz 4~35˚C	220V/50Hz 4~35˚C
Warranty	1 Year	1 Year	1 Year	1 Year

purinizer®
Water Purifier + Ionizer

Ionizer Standalone

TYENT USA

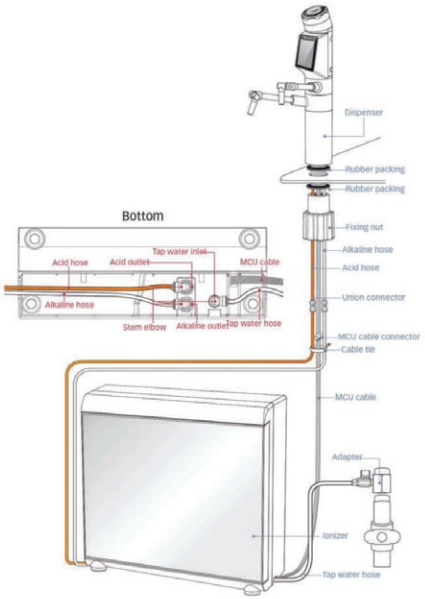

EQST-INZ-UCE-9P — ₹2,79,000

EQST-INZ-UCE-11P — ₹2,97,000

EQST-INZ-5P — ₹1,53,000

EQST-INZ-7P — ₹1,85,000

EQST-INZ-9P — ₹2,17,000

EQST-INZ-11P — ₹2,48,000

EQUUS

ALKAMEDI KOREA

MODEL NO.	EQSA-INZ-5P-2000	EQSA-INZ-7P-4100
WATER QUALITY		
pH Range	Min- 3.5 to Max- 10.5	Min- 3 to Max- 11
ORP Range	+500mV to 500mV	+600mV to 600mV
Electrode Plates	5	7
Levels	Alkaline - 4, Purified - 1, Acidic - 2	Alkaline - 4, Purified - 1, Acidic - 2
SPECIAL FEATURES (CHEMICAL FREE)		
Display	7 LCD colour display	7 LCD colour display
Dispensing type	Flexible Spout	
Operation	Knob & Touch button	
E Plate Cleaning	DARC System Patented Automatic	
Filter / Filter Life	Carbon Black & UF Carbon / 6-10 months or About 3600 L (Depending on source of water quality)	
MECHANICAL / ELECTRICAL SPECIFICATIONS		
Product size- mm	240 (W) x 150 (D) x 345 (H)	257 (W) x 159 (D) x 375 (H)
Weight- Kgs	5.4	6.1
Input Voltage AC	220-240V/50-60 Hz	220-240V/50-60 Hz
Warranty	1 Year	1 Year

purinizer®
Water Purifier + Ionizer

Ionizer Standalone ALKAMEDI KOREA

EQSA-INZ-5P-2000 ₹1,47,990

EQSA-INZ-7P-4100 ₹1,97,990

KFDA RoHS UL LISTED CE ISO GMP

EQUUS

PUREPRO DRINKING WATER SYSTEM

MODEL NO.	EQSP-PFR-108	EQSP-PFR-106 UVP	E-PURE	EQSC-DewPond
WATER QUALITY				
pH Range	8.0 pH - 9.5 pH	8.0 pH - 9.5 pH	7.0 pH – 8.5 pH	7.5 pH - 9.5 pH
Filtration Levels	8 Stage	6 Stage	7 Stage	6 Stage
Production Capacity (Liters Day/Gallons Day)	378 / 100	189 / 50	378 / 100	————
SPECIAL FEATURES BOOSTER PUMP INBUILT				
1/4 Turn Twist & Quick-Change Cartridge	Quick-change cartridge (QCC) (fast, clean & easy) Sediment, GAC Carbon, CTO Carbon, TFC Membrane, Post Carbon, Mineral, Far-Infrared, Alkaline	Sediment, GAC Carbon, CTO Carbon, TFC Membrane, Post Carbon, UV Steiliser	Pre-filter, Sediment, Carbon, TFC Membrane, Alkaline, UV Sterilizer, UF Filter	Pre- filter (Optional), Sediment, Pre-Carbon, RO Filter, Alkali Mineralizer, UF Filter, Kitchen & Daily Care (Optional) UV Sterilizer
Filter Life - Months	6 Months (Depending on source of water quality)			
Dispensing Faucet	Included	Included	Included	Optional
MECHANICAL / ELECTRICAL SPECIFICATIONS				
System Dimensions Weight - Kgs	29 (L) x 42.5 (W) x 21 (H) cm System - 8kgs / Tank - 4kgs	29 (L) x 42.5 (W) x 21 (H) cm System - 8kgs / Tank - 4kgs	45 (L) x 38 (W) x 25 (H) cm 8.5kgs	36.7 (L) x 23.5 (W) x 48.4 (H) cm 10kgs
Storage Tank Capicity Liters	12.2	12.2	9	7.5
Input Voltage AC	220V/50HZ	220V/50HZ	220V/50HZ	220V/50HZ
Operation pressure PSI	5 -80	50 -100	3 -50	3 to 50
Warranty	1 Year	1 Year	1 Year	1 Year

* pre filter change shall be extra if needed

purinizer®
Water Purifier + Ionizer

Water Purifiers - Alkaline

PUREPRO DRINKING WATER SYSTEM

EQSP-PFR-108 ₹32,999

EQSP-PFR-106 UVP ₹32,999

E-PURE ₹22,990

CUCKOO

EQSC-DewPond ₹27,990

USA
© PUREPRO USA CORP., U.S.A.

MEMBER Water Quality ASSOCIATION

EQUUS®

RULING KITCHEN SINK SPACE

A clean and hygienic kitchen is the single most concern when planning an Indian house.
Of late, having a well-equipped Modular Kitchen is in vogue.
There are several international prestigious players to provide kitchen hardware like cabinets, shelves etc.
Similarly, another group of national and international players are providing a range of kitchen appliances- Refrigerators, Cook tops, Chimneys, microwaves, ovens etc.
Latest trend is for Built-in- appliances and Below-counter appliances to enhance the kitchen aesthetics.
However, the area around kitchen was satisfied only with a Kitchen sink and water tap.
As most of the cleaning takes place in and around kitchen sink, its quick and efficient disposal is also important to maintain hygiene and odourless conditions in the kitchen.
EQUUS found an opportunity here. And created a niche for itself by introducing a range of appliances to deal with the problem.

Ruling **Kitchen Sink** Space

EQUUS

PUREPRO DRINKING WATER SYSTEM CUCKOO

MODEL NO.	EQSP-TTOP-1	EQSP-Bonnie	EQSC-FTop	EQSC-FStand
WATER QUALITY				
pH Range	7.0 – 9.0 (Mild Alkaline)	7.0 – 9.0 (Mild Alkaline)	7.0 – 9.0 (Mild Alkaline)	7.0 – 9.0 (Mild Alkaline)
Filtration Level	Direct to Filter	5 Stage	5 Stage	6 Stage
SPECIAL FEATURES				
Dispensing Faucet	Non-Stop Cold / Hot	Non-Stop Cold / Hot	Non-Stop Cold / Hot	Non-Stop Cold / Hot
Water Temperature	88˚c / 3-7˚c Cold room	88˚c / 3-7˚c Cold room	88˚c / 3-7˚c Cold room	88˚c / 3-7˚c Cold room
Switch Type/ Child Safety Provided	Tocuh Interface	Tocuh Interface	Tocuh Interface	Tocuh Interface
Filter Assembly	Input water supply from water purifier system	Built-in 5 stage water purification	5 Stage Mild Alkaline	5 Stage Mild Alkaline
TDS (Installation condition)	Municipal corporation supply & grounded & bore well (upto 2000 TDS)			
Storage tank -Capacity-Litres -Chilling- Litres (hr) -Heating-Litres (hr) -Room Temp-Litres	SS antibacterial Filter water source 20 10 -	SS antibacterial 80 GPD 20 10 -	SS antibacterial 5.2 Liters 2 1.4 1.8	SS antibacterial 6.2 Liters 2.0 2.4 1.8
MECHANICAL / ELECTRICAL SPECIFICATIONS				
Product Dimensions Weight- Kgs	33 (L) x 35 (W) x 47.5 (H) cm 14.5 kgs	33 (L) x 35 (W) x 105 (H) cm 22.5 kgs	26 (L) x 48.2 (W) x 50.5 (H) cm 16.5 kgs	26 (L) x 48 (W) x 116 (H) cm 22.3 kgs
Input Voltage AC	240V/50HZ	240V/50HZ	240V/50HZ	240V/50HZ
Warranty	1 Year	1 Year	1 Year	1 Year

purinizer®
Water Purifier + Ionizer

Water Dispensers Hot & Cold

USA
© PUREPRO USA CORP., U.S.A.

CUCKOO

EQSC-FTop ₹45,990

EQSC-FStand ₹57,990

PUREPRO
DRINKING WATER SYSTEM

EQSP-TTop-1 ₹59,990

EQSP-Bonnie ₹89,990

EQUUS

3 IN 1 Kitchen Faucets

ONE TAP-MULTIFUCTION

SPECIAL FEATURES

- Delivers hot, cold, and filtered water from same spout
- European design
- High quality material
- Professional workmanship
- No need to drill hole for new, just fits into the old one
- Hot + Cold + Filterd water

RO Faucet

Chrome Finish
EQSP-FT-101-C
₹3,099

Brush Nickle Finish
EQSP-FT-101-BN
₹4,299

Black Finish
EQSP-FT-101-BL
₹4,599

Chrome Finish
EQSP-FT-1001-BN
₹3,699

purinizer®
Water Purifier + Ionizer

Faucets 3 IN 1

USA
© PUREPRO USA CORP., U.S.A.

Chrome Finish
EQSP-F3306-C ₹26,990

Chrome Finish
EQSP-F3307-C ₹26,990

Chrome Finish
EQSP-F3309-C ₹26,990

Chrome Finish
EQSD-F3302-C ₹26,990

Brush Nickle Finish
EQSD-F3302-BN ₹28,990

Black Finish
EQSD-F3302-BL ₹30,990

Chrome Finish
EQSP-F3304-C ₹26,990

EQUUS

EMERSON insinkerator

WRAS APPROVED PRODUCT

MODEL NO.	EQSE-HC 3300-C EQSE-HC 3300-BS	EQSE-H 3300-C EQSE-H 3300-BS	EQSE-HC 1100-C EQSE-HC 1100-BS	EQSE-GN1100-C EQSE-GN1100-BS
SPECIAL FEATURES				
Storage tank Capacity - Liters	2.5 SS	2.5 SS	2.5 SS	2.5 SS
Dispensing Faucet type	- All-brass - 90˚ swivelling gooseneck - hot push-lever locking mechanism	- All-brass - 90˚ swivelling gooseneck - hot push-lever locking mechanism	- Elegant swivel spout for convenience - Gentle touch one-lever dispenser	- Elegant swivel spout for convenience - Gentle touch one-lever dispenser
Water temperature	93.3˚ c (200˚ f) near-boiling water	93.3˚ c (200˚ f) near-boiling water	88˚ c - 99˚ c	88˚ c - 99˚ c
Unique feature	Dispenses both near-boiling hot and cold filtered water	Dispenses near-boiling hot filtered water	Dispenses hot and cool filtered water	Dispenses only hot filtered water
MECHANICAL/ELECTRICAL SPECIFICATIONS				
Hole diameter- mm	35 - 38	35 - 38	35 - 38	35 - 38
Power -AC volts	220 - 240 V	220 - 240 V	220 - 240 V	220 - 240 V
Input pressure -Kpa -bar -psi	 172 – 862 1.7 – 8.6 25 – 125	 172 – 862 1.7 – 8.6 25 – 125	 172 – 862 1.7 – 8.6 25 – 125	 172 – 862 1.7 – 8.6 25 – 125

purinizer®
Water Purifier + Ionizer

Filter-Water Taps Hot & Cold

EMERSON insinkerator MADE IN USA

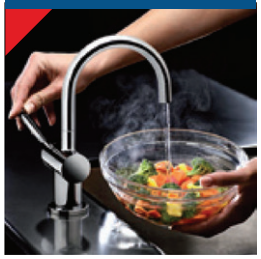

Chrome Finish
EQSE-HC 3300-C ₹72,990
EQSE-HC 3300-BS ₹81,990
Brush Nickle Finish

Chrome Finish
EQSE-H 3300-C ₹51,990
EQSE-H 3300-BS
Brush Nickle Finish

Chrome Finish
EQSE-HC 1100-C ₹51,990
EQSE-HC 1100-BS

Chrome Finish
EQSE-GN1100-C ₹39,990
EQSE-GN1100-BS
Brush Nickle Finish

EQUUS MODEL NO.	EQSE-SS TANK		EQSE-FILTER701R
Storage tank capacity	2.5 Liters	Specifications	Provides mechanical and chemical reduction of dirt/rust, taste/odour, chlorine, lead and particulates. Has the ability to reduce scale formation by reducing hardness and alkalinity.
Thermostat	Easy-to-adjust temperature control		
Insulation	Meets UL 94HF-1 flammability specification		
Water temperature	Range from 71°c - 98°c		
		Filter capacity	454 Litres (120 gallons)
MECHANICAL/ELECTRICAL SPECIFICATIONS			
Weight	Approx. 5.7 lbs	Weight	5.7 lbs (approx.)
Power	230 volts, 50Hz, 6.5 amps	Power	220 volts, 50Hz, 6.5 amps
Supply Pressure	30-125 psi	Flow Rate	2.84 LPM (0.75 GPM)

purinizer®
Water Purifier + Ionizer

Steaming Hot Water Tank and Filter

EMERSON insinkerator MADE IN USA

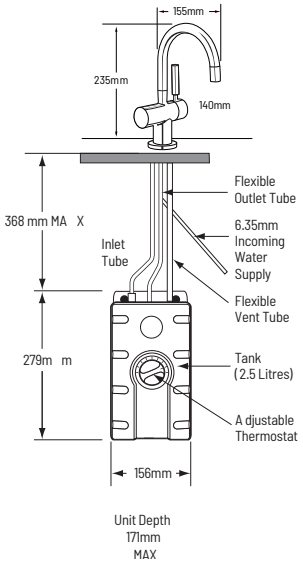

EQSE-SS TANK

₹51,990

EQSE-FILTER701R

₹7,000

INSTALLATION DIAGRAM

EQUUS®

Food Waste Disposer Residential

EMERSON

in sink erator®

MODEL 46

FOOD WASTE DISPOSER

The entry level InSinkErator model, suitable for lighter use in smaller households.

₹24,990

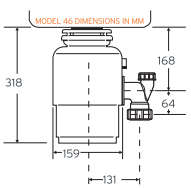

InSinkErator reserves the right to change product specifications without prior notice. The disposers described are for household use. Usage in commercial situations is not covered by warranty.

- BASIC SOUND REDUCTION TECHNOLOGY
- 1 STAGE GRINDING SYSTEM
- GRIND CHAMBER 980ML CAPACITY
- QUICKLOCK™ SINK MOUNT FOR EASY INSTALLATION
- AIR SWITCH KIT* AVAILABLE (33MM HOLE FOR BUTTON)
- 0.55HP DURA-DRIVE™ HEAVY DUTY
- 1 YEAR WARRANTY
- MADE IN THE USA

*optional

MODEL 56

FOOD WASTE DISPOSER

This mid-range model is perfect for regular use in smaller households.

₹29,990

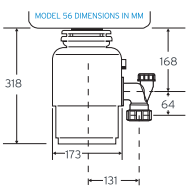

InSinkErator reserves the right to change product specifications without prior notice. The disposers described are for household use. Usage in commercial situations is not covered by warranty.

- BASIC SOUND REDUCTION TECHNOLOGY
- 1 STAGE STAINLESS GRINDING SYSTEM
- STAINLESS STEEL GRIND CHAMBER 980ML CAPACITY
- BUILT-IN AIR SWITCH (33MM HOLE FOR BUTTON)
- 0.55HP DURA-DRIVE™ HEAVY DUTY INDUCTION MOTOR
- QUICKLOCK™ SINK MOUNT FOR EASY INSTALLATION
- 1 YEAR WARRANTY
- MADE IN THE USA

MODEL 66

FOOD WASTE DISPOSER

This top model in our standard range, offering high performance, continuous feed operation and able to handle a wide variety of food waste.

₹46,990

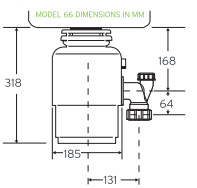

InSinkErator reserves the right to change product specifications without prior notice. The disposers described are for household use. Usage in commercial situations is not covered by warranty.

- BASIC SOUND REDUCTION TECHNOLOGY
- 1 STAGE STAINLESS GRINDING SYSTEM
- STAINLESS STEEL GRIND CHAMBER 980ML CAPACITY
- BUILT-IN AIR SWITCH (33MM HOLE FOR BUTTON)
- 0.75HP DURA-DRIVE™ HEAVY DUTY INDUCTION MOTOR
- QUICKLOCK™ SINK MOUNT FOR EASY INSTALLATION
- 1 YEAR WARRANTY
- MADE IN THE USA

FEED A DISPOSER. STARVE A LANDFILL.

purinizer®
Water Purifier + Ionizer

Food Waste Disposer Residential

EMERSON insinkerator

WATERMARK
CERTIFIED & AUTHORISED
All our Food Waste Disposers pass the WaterMark test!

GreenPro

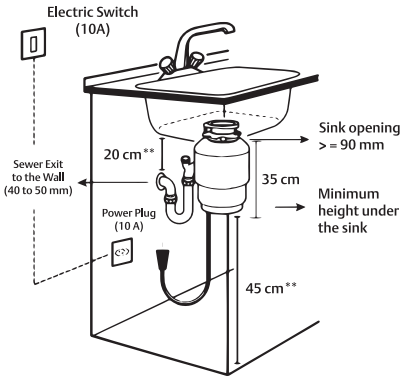

₹73,990

EVOLUTION 100 TECHNOLOGY

Featuring two-stage grinding combined with SoundSeal™ Plus technology, the Evolution 100 is more powerful and quieter than our standard range. It virtually grinds any food waste, including dif cult items such as bones and potato peel.

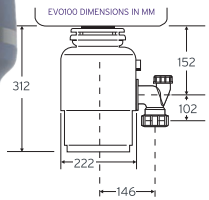

InSinkErator reserves the right to change product specifications without prior notice. The disposers described are for household use. Usage in commercial situations is not covered by warranty.

- SOUND SEAL PLUS™ EVOLUTION QUIETER TECHNOLOGY
- 0.75HP DURA-DRIVE™ HEAVY DUTY INDUCTION MOTOR
- MULTIGRIND PLUS™ 2 STAGE STAINLESS GRINDING SYSTEM WITH AUTO REVERSE ACTION
- QUICKLOCK™ SINK MOUNT FOR EASY INSTALLATION
- STAINLESS STEEL GRINDING CHAMBER 1005ML LARGE CAPACITY
- 1 YEAR WARRANTY
- BUILT-IN AIR SWITCH (33MM HOLE FOR BUTTON)
- MADE IN THE USA

₹88,990

EVOLUTION 200 TECHNOLOGY

The Evolution 200 with it's three stage grind technology & SoundSeal™ Plus, makes it our most powerful & quietest model. Don't worry about what you can and can't grind... the Evolution 200 grinds all food waste.

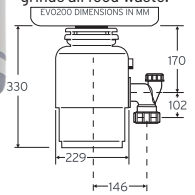

InSinkErator reserves the right to change product specifications without prior notice. The disposers described are for household use. Usage in commercial situations is not covered by warranty.

- BUILT-IN AIR SWITCH (33MM HOLE FOR BUTTON)
- SOUNDSEAL PLUS™ EVOLUTION ULTRA-QUIET TECHNOLOGY
- 0.75HP DURA-DRIVE™ HEAVY DUTY INDUCTION MOTOR
- MULTIGRIND PLUS™ 3 STAGE STAINLESS GRINDING SYSTEM WITH
- QUICKLOCK™ SINK MOUNT FOR EASY INSTALLATION
- STAINLESS STEEL GRINDING CHAMBER 1180ML LARGE CAPACITY
- 1 YEAR WARRANTY
- MICRO PROCESSOR FOR POWER TO BOOST GRINDING CAPABILITY
- MADE IN THE USA

**The drain outlet should be 20 cm from the bottom of the sink or 45 cm above the finished floor (only for exit to the wall).
For sewer exit to the floor - there is no such requirement

• **If any of the above criteria do not match, please contact your supplier for a customised solution.**

EQUUS

EMERSON

in sink erator

- Throat opening of 152.6mm
- Stainless Steel Grind Chamber
- Dual-Duration
- Heavy Cast Iron Stationary and Rotary Shredder
- Double-Tapered Timken Roller Bearings
- Durable Heavy-Duty Induction Motor

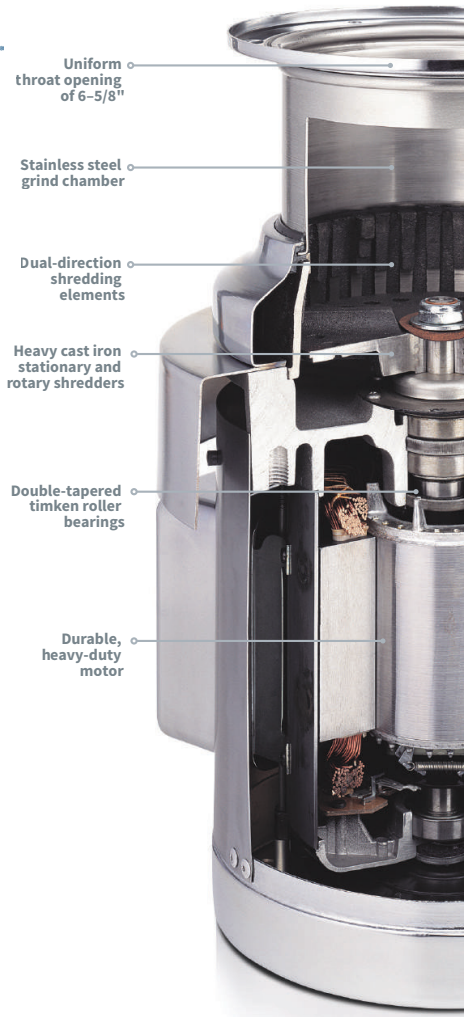

Typical Installatlon & Sizing Chart

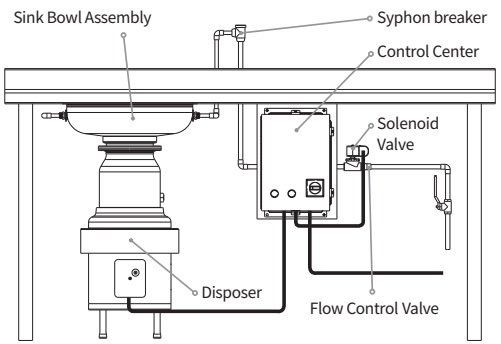

Dish table, plumbing, and electrical connections sold separately.

Volume Processed	Light (Majority Fruits & Vegetables)	Medium (50/50 Mixture)	Heavy (Majority Meats & Seafood)
High (Buffet/Cafeteria Government)	SS-300	SS-300/500	SS-500	SS-500/1000	SS-500/1000
Medium (Full Service Restaurant)	SS-200	SS-300	SS-300/500	SS-500	SS-500/1000
Low (Limited Service Restaurant/Café/Fast Casual)	SS-100/150	SS-200	SS-300	SS-300/500	SS-500
	SS-100	SS-100/150	SS-200	SS-300	SS-300/500

Food Waste Composition

Built smart. Built tough. Built reliable.

Durable construction, superior performance and reliable dependability make InSinkErator America's best-selling food waste disposer.

purinizer®
Water Purifier + Ionizer

Food Waste Disposer Commercial

EMERSON
insinkerator

LC-50 ₹2,12,990

SS-100 ₹4,03,300

SS-300 ₹6,80,300

SS-200 ₹5,13,500

EQUUS® CARE

For EQUUS, customer satisfaction through prompt customer service is as important as offering the best products.
We believe in building ever-lasting cordial relationship with our customers.

QUALITY PRODUCTS

Only the best and latest qualifies to be a product in overall EQUUS product basket. It ensures minimum technical and performance issues for you. Every product is covered by manufacturer's warranty and guarantee.

QUALITY EQUUS CHECK

To doubly ensure trouble-less product delivery, EQUUS carries out a quality check at its own premises before releasing the product to customer.

PROMPT INSTALLATION

EQUUS has team of trained technicians at all its branches. It ensures perfect and prompt product installation at your premises.

AFTER SALES SERVICE

EQUUS maintains a digital record of appliances supplied to you. It helps in advance alert to you for maintenance service.
For any emergency service, EQUUS is accessible:

+91 70690 07676 | +91 70690 07666 care@equusindia.co

Attending your service call within 24 working hours is assured.

*Product and Service offerings and their availability are subject to change. All prices offered are exclusive of taxes. Product colors and images are used only for illustration purposes and they may not exactly match with the actual products. Product specifications mentioned are subject to change and may vary from actual operating values. While every care has been taken to avoid inaccuracies in content, these have been provided as it is without any warranty of any kind.

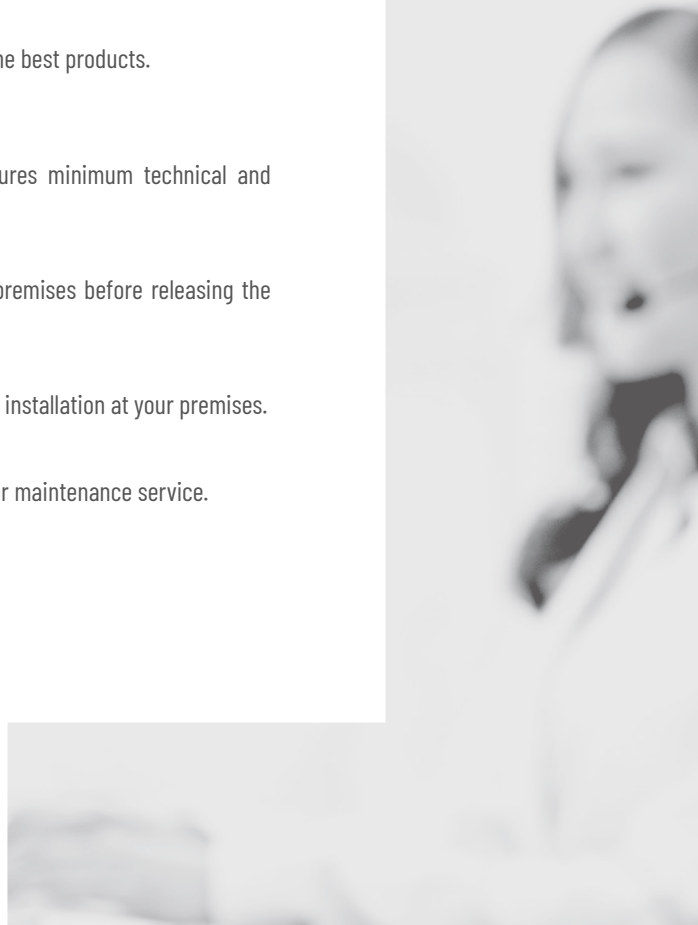

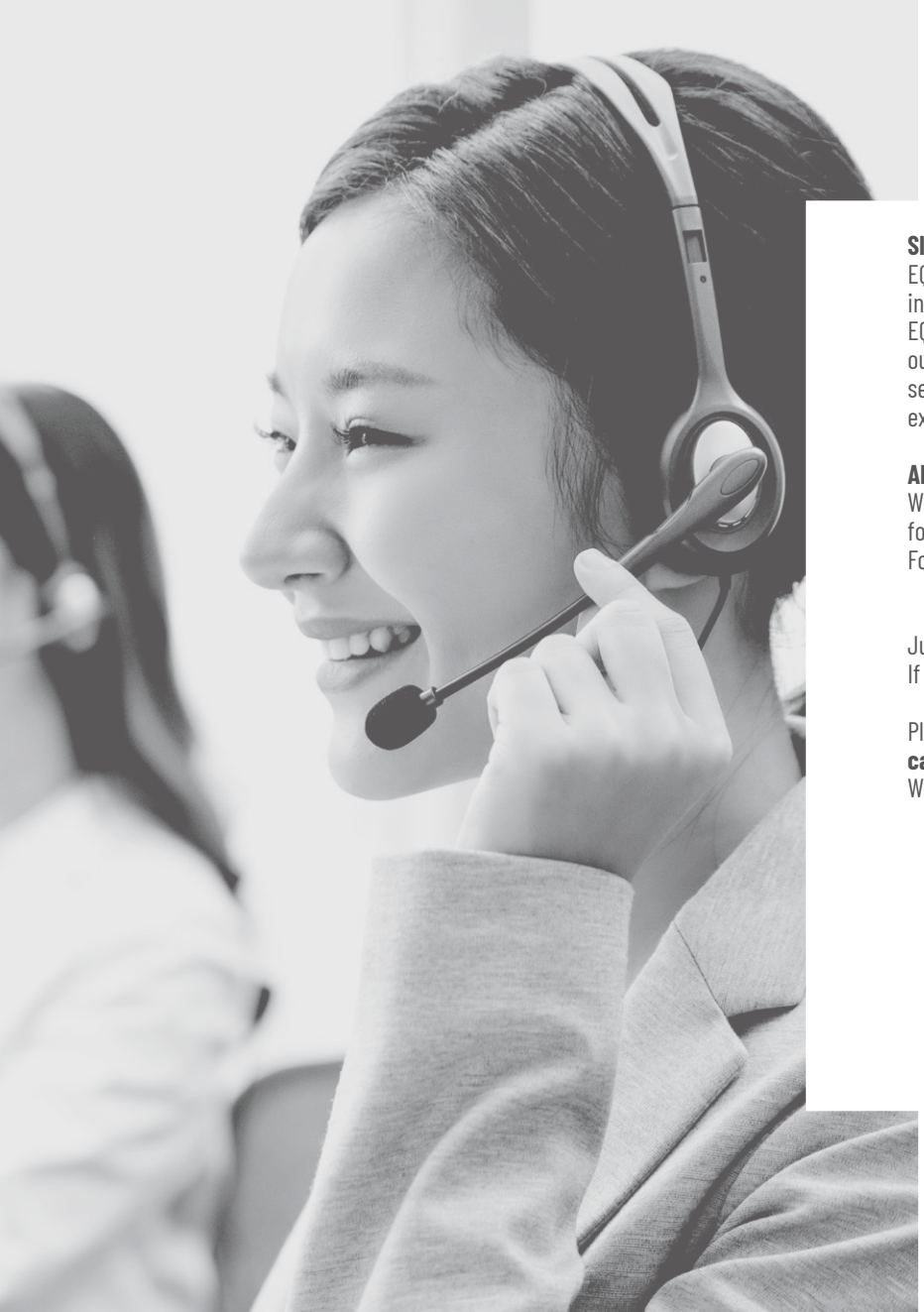

SINK SPACE DESIGN SERVICE

EQUUS helps you in planning the space around sink-area or in modular kitchen to accommodate selected products from EQUUS basket in your modular kitchen. You may also need our help in deciding the power and water points. Such service may be needed whether you are renovating an existing kitchen or setting up a new kitchen.

ANNUAL MAINTENANCE CONTRACT

We also undertake Annual Maintenance Contract (AMC), for our products for your convenience.
For details, please contact care@equusindia.co

Just inform us on **care@equusindia.co**
If there is any other way you need our help,

Please feel free to
call on mobile: +91 70690 07676
We shall be too happy to help you.

EQUUS

600 CABINET OPTION

Ⓐ EQSE-FWDR- E100

Ⓔ EQSP-PNZ-3P / EQSP-PNZ-5P /EQSP-PNZ-7P

Ⓒ EQSE-SS TANK + EQSE-H 1100 C/BS

Ⓕ EQSP-F3306-C

SINK SPACE DESIGN SERVICE

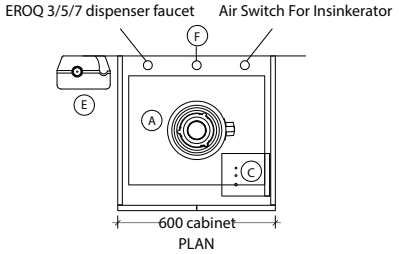

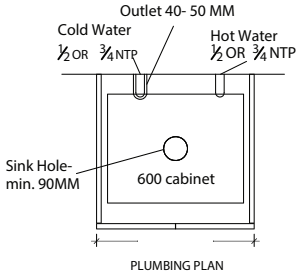

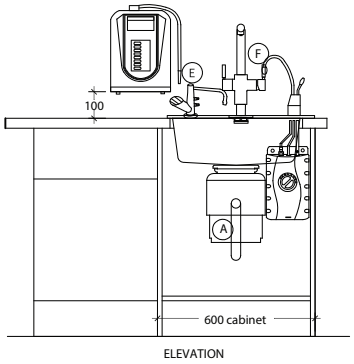

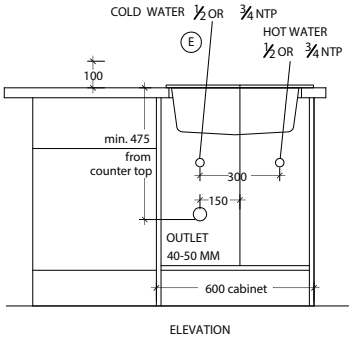

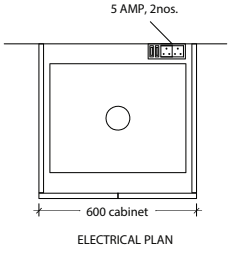

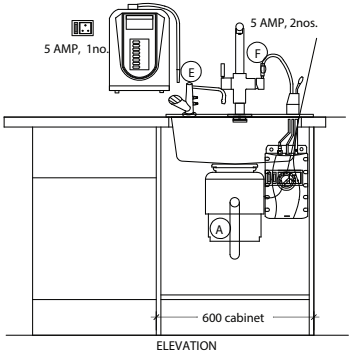

600 CABINET OPTION 2

Ⓑ EQSP-PFR-108

Ⓔ EQSP-F3306-C

Ⓒ EQS-PNZ-JA-2000

Ⓔ EQSE-SS TANK + EQSE-H 1100 C/BS

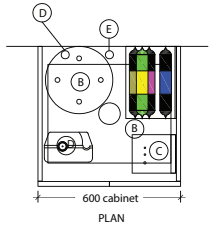

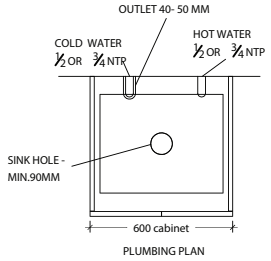

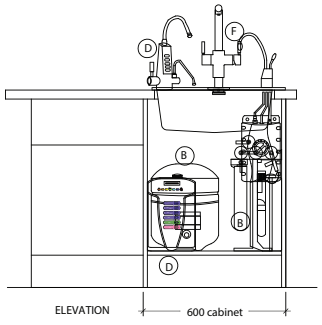

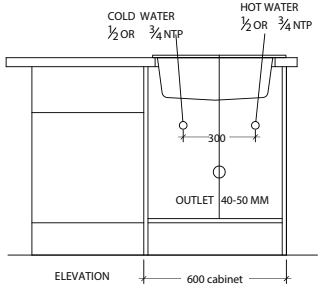

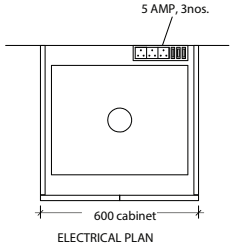

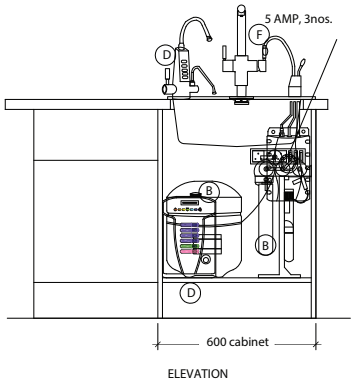

*For reference purpose only

EQUUS

900 CABINET SINGLE SINK OPTION

- (A) EQSE-FWDR- E100
- (E) EQSP-F3306-C
- (D) EQS-PNZ-JA-2000
- (B) EQSP-PFR-108
- (C) EQSE-SS TANK + EQSE-H 1100 C/BS

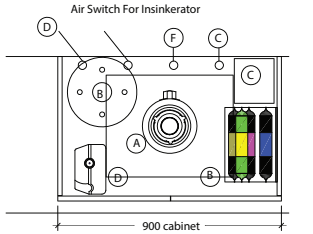

PLAN

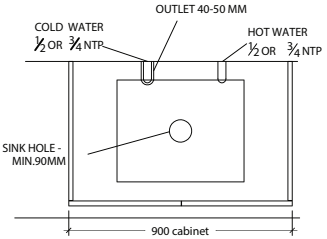

PLUMBING PLAN

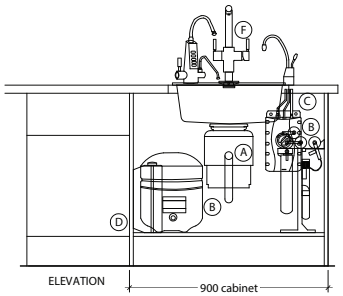

ELEVATION

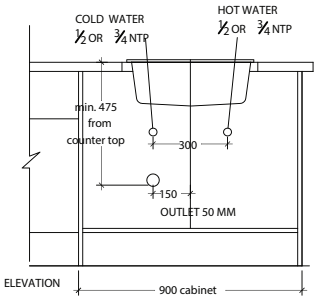

ELEVATION

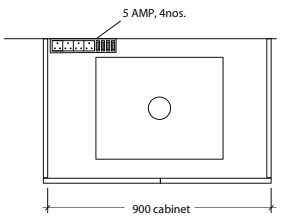

ELECTRICAL PLAN

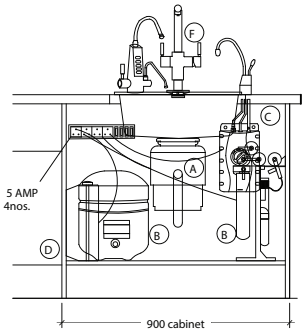

ELEVATION

SINK SPACE DESIGN SERVICE

900 CABINET DOUBLE SINK OPTION 1

- (A) EQSE-FWDR- E100
- (E) EQSP-F3306-C
- (D) EQS-PNZ-JA-2000
- (B) EQSP-PFR-108
- (C) EQSE-SS TANK + EQSE-H 1100 C/BS

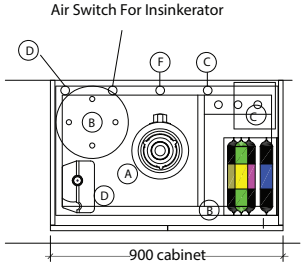

PLAN

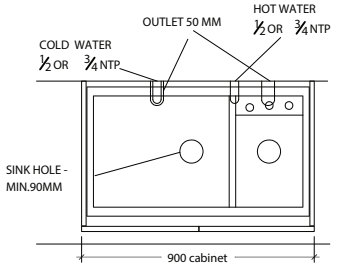

PLUMBING PLAN

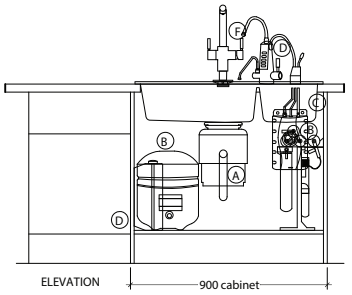

ELEVATION

* separate outlet points to be provided for each sink with its own u-trap

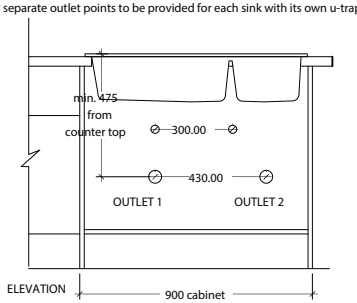

ELEVATION

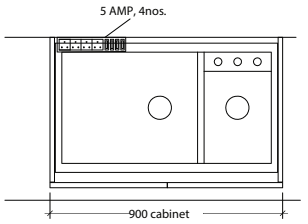

ELECTRICAL PLAN

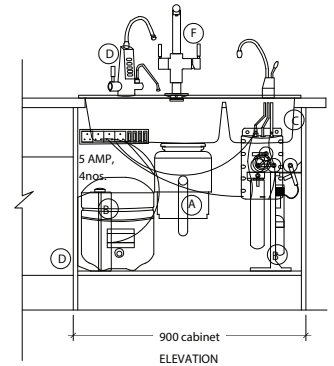

ELEVATION

*For reference purpose only

EQUUS®

purInizer®
Water Purifier + Ionizer

Equus Enterprises LLP

B-302, Shilp Aaron, Tower-B,
Sindhu Bhavan Road, Bodakdev,
Ahmedabad - 380 054, Gujarat, India.

+91 79 2970 1179 | +91 70690 07666
info@equusindia.co | www.equusindia.co
Follow us on:

India
Marketing

Existing
Targeted